PROMAC®

06-2017

Milling drilling centre
Bohr- Fräsmaschine
Perceuse fraiseuse

PBM-1839BDV

CE

Schweiz / Suisse
JPW (TOOL) AG
Tämperlistrasse 5
CH-8117 Fällanden Switzerland
www.promac.ch

France
TOOL France / PROMAC
57, rue du Bois Chaland, Z.I. du Bois Chaland
case postale 2935 FR-91029 Evry Cedex
www.promac.fr

CE-Conformity Declaration
CE-Konformitätserklärung
Déclaration de Conformité CE

Product / Produkt / Produit:
Milling drilling centre / Bohr-Fräsmaschine / Perceuse fraiseuse

PBM-1839BDV

Brand / Marke / Marque:

PROMAC

Manufacturer / Hersteller / Fabricant:
JPW (Tool) AG, Tämperlistrasse 5, CH-8117 Fällanden
Schweiz / Suisse / Switzerland

We hereby declare that this product complies with the regulations
Wir erklären hiermit, dass dieses Produkt der folgenden Richtlinie entspricht
Par la présente, nous déclarons que ce produit correspond aux directives suivantes

2006/42/EC
Machinery Directive
Maschinenrichtlinie
Directive Machines

2014/30/EU
electromagnetic compatibility
elektromagnetische Verträglichkeit
compatibilité électromagnétique

designed in consideration of the standards
und entsprechend folgender zusätzlicher Normen entwickelt wurde
et été développé dans le respect des normes complémentaires suivantes

EN ISO 12100:2010

EN 12717:2001+AC:2010, EN 13128:2001+A1 A2

EN 60204-1:2006+A1:2009

EN 55014-1:2006+A2:2011, EN 55014-2:2015

EN 61000-3-2:2014, EN 61000-3-3:2013

Responsible for the Documentation / Dokumentations-Verantwortung / Responsabilité de Documentation:

Hansjörg Meier

Head Product-Mgmt. / Leiter Produkt-Mgmt. / Resp. Gestion des Produits
JPW (Tool) AG

2017-03-28 Alain Schmid, General Manager

JPW (Tool) AG, Tämperlistrasse 5, CH-8117 Fällanden
Schweiz / Suisse / Switzerland

EN Operating Instructions (Original)

1.0 About this Manual

This manual is provided by PROMAC, covering the safe operation and maintenance procedures for a PROMAC Model PBM-1839BDV Milling machine. This manual contains instructions on installation, safety precautions, general operating procedures, maintenance instructions and parts breakdown. The machine has been designed and constructed to provide consistent, long-term operation if used in accordance with the instructions as set forth in this document.

Retain this manual for future reference. If the machine transfers ownership, the manual should accompany it.

2.0 Table of Contents

Section ..... **Page**

1.0 About this manual 3
2.0 Table of contents 3
3.0 Important safety instructions ..... 4~5
3.1 Designated use and limitations to use 6
3.2 Remaining hazards 6
4.0 Specifications ..... 7~8
5.0 Machine description 9
6.0 Setup and assembly 10
6.1 Unpacking and clean up 10
6.2 Shipping contents 10
6.3 Assembly 10
6.4 Initial lubrication 10
6.5 Installation 10
7.0 Electrical connections 10
7.1 Grounding instructions 10
7.2 Extension cords 11
8.0 Adjustments ..... 11~13
8.1 Arbour replacement 11
8.2 Engaging fine feed hand wheel 11
9.0 Operating controls 11
10.0 Machining operation ..... 11~12
10.1 Starting spindle rotation 12
10.2 Recommended spindle speeds 12
10.3 Tapping function 12
11.0 User maintenance 13
11.1 Slide adjustments 13
11.2 Lead screw nut adjustments 13
11.3 Lubrication 13
12.0 Troubleshooting 14
13.0 Environmental protection 14
14.0 Replacement parts ..... 15~26
15.0 Wiring diagrams ..... 27~28

3.0 IMPORTANT SAFETY INSTRUCTIONS

READ ALL INSTRUCTIONS BEFORE USING THIS DRILL PRESS.

– To reduce risk of injury:

1. Read and understand entire owner's manual before attempting assembly or operation of this drill press.
2. Read and understand the warnings posted on the machine and in this manual.
3. Replace warning labels if they become obscured or removed.
4. This machine is designed and intended for use by properly trained and experienced personnel only. If you are not familiar with the proper and safe operation of a drill press, do not use until proper training and knowledge have been obtained.
5. Do not use this machine for other than its intended use. If used for other purposes, JET disclaims any real or implied warranty and holds itself harmless from any injury that may result from that use.
6. Always wear approved safety glasses or face shield while using this machine. (Everyday eyeglasses only have impact resistant lenses; they are *not* safety glasses.)
7. Before operating this machine, remove tie, rings, watches and other jewellery, and roll sleeves up past the elbows. Remove loose clothing and confine long hair. Non-slip footwear or anti-skid floor strips are recommended. Do **not** wear gloves.
8. Wear hearing protection (plugs or muffs) during extended periods of operation.
9. Some dust created by sawing may contain chemicals known to cause cancer, birth defects or other reproductive harm. Some examples of these chemicals are:
   - Lead from lead based paint.
   - Crystalline silica from bricks, cement and other masonry products.
   - Arsenic and chromium from chemically treated lumber.

   Your risk of exposure varies, depending on how often you do this type of work. To reduce your exposure to these chemicals, work in a well-ventilated area and work with approved safety equipment, such as face or dust masks that are specifically designed to filter out microscopic particles.
10. Do not operate this machine while tired or under the influence of drugs, alcohol or any medication.
11. Make certain the switch is in the **OFF** position before connecting the machine to the power supply. Turn off all controls before unplugging.
12. Make certain the machine is properly grounded. Connect to a properly grounded outlet only. See Grounding instructions.
13. Make all machine adjustments or maintenance with the machine unplugged from the power source.
14. Remove adjusting keys and wrenches. Form a habit of checking to see that keys and adjusting wrenches are removed from the machine before turning it on.
15. Keep safety guards in place at all times when the machine is in use. If removed for maintenance purposes, use extreme caution and replace the guards immediately after maintenance is complete.
16. Check damaged parts. Before further use of the machine, a guard or other part that is damaged should be carefully checked to determine that it will operate properly and perform its intended function. Check for alignment of moving parts, binding of moving parts, breakage of parts, mounting and any other conditions that may affect its operation. A guard or other part that is damaged should be properly repaired or replaced.
17. Provide for adequate space surrounding work area and non-glare, overhead lighting.
18. Keep the floor around the machine clean and free of scrap material, oil and grease.
19. Keep visitors a safe distance from the work area. **Keep children away.**
20. Make your workshop child proof with padlocks, master switches or by removing starter keys.
21. Give your work undivided attention. Looking around, carrying on a conversation and "horse-play" are careless acts that can result in serious injury.
22. Keep an ergonomic body position. Maintain a balanced stance at all times so that you do not fall or lean against the chuck or other moving parts. Do not overreach or use excessive force to perform any machine operation.
23. Use the right tool at the correct speed and feed rate. Do not force a tool or attachment to do a job for which it was not designed. The right tool will do the job better and safer.
24. The machine is intended for indoor use. To reduce the risk of electric shock, do not use outdoors or on wet surfaces.
25. Do not handle plug or machine with wet hands.
26. Use recommended accessories; improper accessories may be hazardous.
27. Maintain tools with care. Keep tools sharp and clean for the best and safest performance. Follow instructions for lubricating and changing accessories.
28. Turn off machine and disconnect from power before cleaning. Use a brush or compressed air to remove chips or debris; do not use bare hands.
29. Do not stand on the machine. Serious injury could occur if the machine tips over.
30. Never leave the machine running unattended. Turn the power off and do not leave the machine until it comes to a complete stop.
31. Remove loose items and unnecessary work pieces from the area before starting the machine.
32. Pull the mains plug if the machine is not in use.
33. Make sure the workpiece is securely clamped.

Familiarize yourself with the following safety notices used in this manual:

WARNING: This means that if precautions are not heeded, it may result in serious, or possibly even fatal, injury.

CAUTION: This means that if precautions are not heeded, it may result in minor injury and/or possible machine damage.

SAVE THESE INSTRUCTIONS

WARNING:
These symbols blow advise that you follow the correct safety procedures when using this machine.

Read and understand the entire user manual before attempting assembly or machine operation.

Always wear approved working outfit
Wear safety goggles.
Wear ear protection.

Always wear the approved working outfit
Wear safety shoes.
Remove tie, rings, watches, jewellery.
Roll up sleeves above elbows.
Remove all loose clothing and confine long hair

Make all machine adjustments or maintenance with the machine unplugged from the power source.

Do not operate this machine under the influence of drugs, alcohol or medication

Do not wear gloves while operating this machine

Connection and repair work on the electrical installation may be carried out by a qualified electrician only.

Never reach into the machine while it is operating or running down.

3.1 **Designated use and limitations to use**

The machine is designed for milling and drilling machinable metal and plastic materials only.

The workpiece must allow to safely be loaded, supported and clamped.

The machine is intended for indoor use. The protection rating of the electrical installation is IP 54.

To avoid tipping, the machine must be bolted down with four anchor bolts.

If used for other purposes, JET disclaims any real or implied warranty and holds itself harmless from any injury that may result from that use.

WARNING:

The machine is not suitable for machining magnesium…high danger to fire!

Never place your fingers in a position where they could contact any rotating parts or chips.

Check the save clamping of the work piece before starting the machine.

Check the save clamping of the cutting tool before starting the machine.

Do not exceed the speed limit of tools and tool holders.

Choose a low speed when using unbalanced tools.

Choose a low speed for tapping. Tapping speed is limited to 500 rpm.

Do not use wire wheels or grinding wheels on this machine.

Use the right tool at the correct speed and feed rate. Do not force a tool or attachment to do a job for which it was not designed. The right tool will do the job better and more safely.

Use recommended accessories; improper accessories may be hazardous.

Maintain tools with care. Keep cutting tools sharp and clean for the best and safest performance.

Follow instructions for lubricating and changing accessories.

Do not attempt to adjust or remove tools during operation.

Remove cutting chips with the aid of an appropriate chip hook when the machine is at a standstill only.

Measurements and adjustments may be carried out when the machine is at a standstill only.

Maintenance and repair work may only be carried out after the machine is protected against accidental starting, pull the mains plug.

Remove loose items and unnecessary work pieces from the area before starting the machine.

Tighten all locks before operating.

3.2 **Remaining hazards**

When using the machine according to regulations some remaining hazards may still exist.

Rotating chuck, tool and cutting chips can cause injury.

Thrown workpieces and workpiece parts can lead to injury.

Hot work pieces and cutting chips can lead to injury.

Tipping of the workpiece due to insufficient support can lead to injury.

Dust, chips and noise can be health hazards. Be sure to wear personal protection gear such as safety goggles, dust mask and ear protection.

The use of incorrect mains supply or a damaged power cord can lead to injuries caused by electricity.

4.0 **Specifications**

Model number PBM-1839BDV
Stock number PBM-1839BDV

Motor and electricals:
- Motor type ..... Brushless DC motor
- Motor power ..... 0.75 kW
- Main power supply ..... 1~230V, PE, 50Hz
- Protection class I
- Listed load amps ..... 3.5 A

Capacities:
Drilling capacity steel St37 ..... 20mm
Tapping capacity steel St37 ..... M10
Milling capacity of face mill 50mm
Milling capacity of end mill 16mm

Spindle:
- Spindle taper MT3
- Draw bar M12
- Spindle travel ..... 70 mm
- Number of spindle speeds ..... variable
- Range of spindle speeds ..... 100 ~ 2000 /min

Milling head:
- Distance spindle to column ..... 190 mm
- Distance spindle to table ..... 75 ~ 340 mm
- Head travel Z-axis ..... 290 mm

Table and Slides:
- Table size ..... 595 x 140 mm
- Table travel X-axis ..... 395 mm
- Table travel Y-axis ..... 185 mm
- Table slots, number of slots 3
- Table T-slot size 12mm
- Table T-slot distance ..... 35 mm

Materials:
- Milling head, table, slides ..... Cast iron, precision machined
- X, Y, Z slide adjustment ..... via tapered gib
- Spindle bearings ..... Taper roller bearing & ball bearing

- Sound emission in idle [1] ..... 74.4 dB (LpA)
- Sound emission during machining [1] ..... 79.3 dB (LpA)

[1] *Sound emission measured according to EN ISO 11202, in 1m distance, 1.6m above ground. The specified values are emission levels and are not necessarily to be seen as safe operating levels. As workplace conditions vary, this information is intended to allow the user to make a better estimation of the hazards and risks involved only.*

Dimensions and Weights:
- Overall dimensions, assembled (W x D x H) ..... 725 x 620 x 880 mm
- Shipping dimensions (W x D x H) ..... 850 x 760 x 1060 mm
- Net weight (approximate) ..... 110 kg
- Shipping weight (approximate) ..... 130 kg

L = length; W = width; H= height; D= depth

The specifications in this manual were current at time of publication, but because of our policy of continuous improvement, JET reserves the right to change specifications at any time and without prior notice, without incurring obligations.

Table T-slot size:

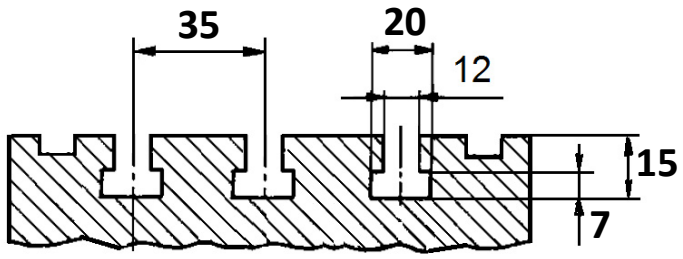

Figure 4-1: Table T-slot size

Anchor bolt hole pattern:

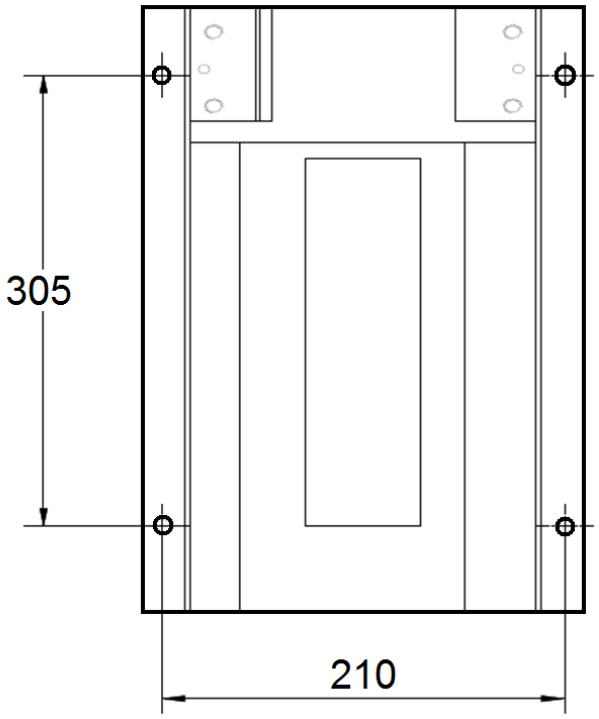

Figure 4-2: Anchor bolt hole pattern

WARNING:
To avoid tipping, the machine must be bolted down with four anchor bolts (not provided).

5.0 **Machine Description**

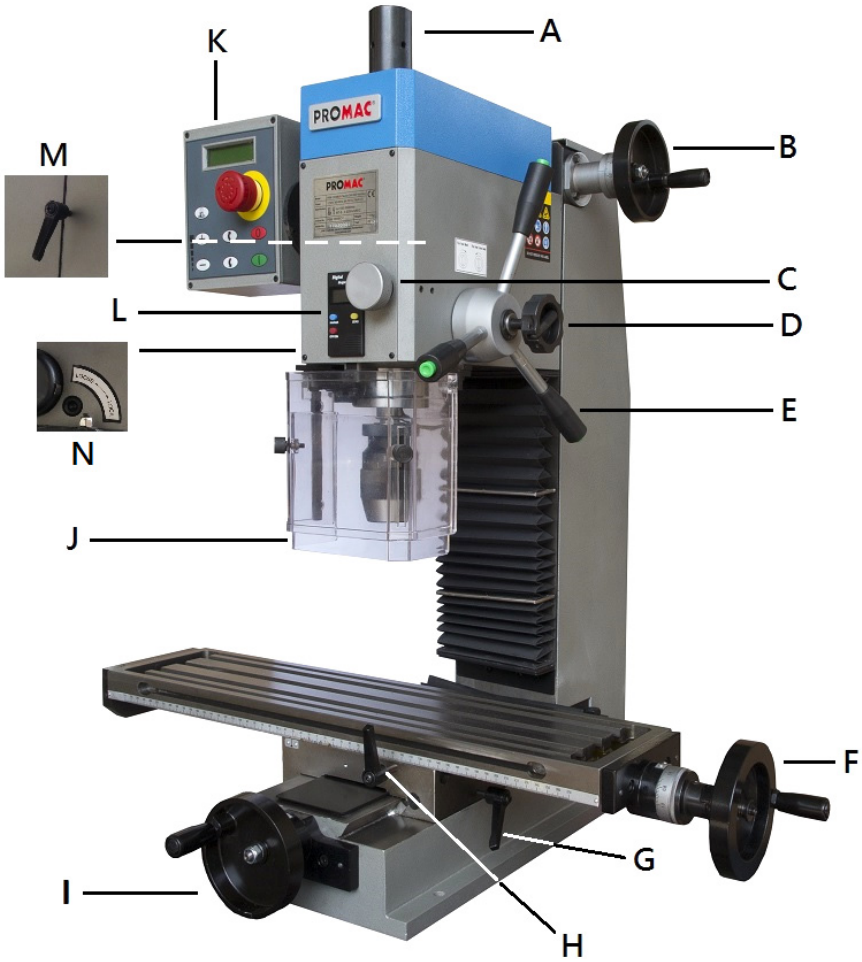

Figure 5-1: Machine description

A ..... Draw bar cover

B ..... Z-axis hand wheel

C .....Fine feeding wheel

D ..... Fine feed engagement knob

E ..... Down feed handle

F .....X-axis hand wheel

G ..... Y- axis slide lock

H ..... X- axis slide lock

I ..... Y- axis hand wheel

J ..... Drill chuck guard

K .....Spindle control panel

L ..... Depth display

M ..... Z-axis slide lock

N .....Quill lock screw

6.0 Setup and Assembly

WARNING:
Read and understand the entire contents of this manual before attempting assembly or operation. Failure to comply may cause serious injury.

6.1 Unpacking and clean up

Remove all contents from shipping crate and compare parts to the contents list in this manual. If shipping damage or any part shortages are identified, contact your distributor. Do not discard crate or packing material until drill press is assembled and running satisfactorily.

Clean all rust protected surfaces with kerosene or a light solvent. Do not use lacquer thinner, paint thinner or gasoline, as these can damage plastic components and painted surfaces.

6.2 Shipping contents

1 Machine
1 Draw bar M12
1 Chuck guard
1 Operating tools
1 Operating instructions and parts manual

6.3 Assembly

The machine comes completely assembled.

Attach the crank handles to the hand wheels (B, F, I, Fig 5-1).

Inspect that all fasteners are tight.

6.4 Initial lubrication

The machine must be serviced at all lubrication points before it is placed into service (see chapter 11.1 for lubrication).

6.5 Installation

Unbolt the lathe from the shipping crate bottom.

Use heavy duty fibre belt for lifting the machine off the pallet.

Warning:
The machine is heavy (110 kg)!
Assure the sufficient load capacity and proper condition of your lifting devices.
Never step underneath suspended loads.

To avoid tipping, the machine must be bolted down with four anchor bolts (not provided).

To avoid twisting the bed, make sure the setup surface is absolutely flat and level.

Loosen anchor bolts, shim and tighten bolts if needed.

The machine must be level to be accurate!

7.0 Electrical Connections

WARNING:
All electrical connections must be done by a qualified electrician in compliance with all local codes and ordinances. Failure to comply may result in serious injury.

The PBM-1839BDV Milling Drilling Centre is rated at 1~230V, 50Hz power supply. The machine comes with a plug designed for use on a circuit with a *grounded outlet.*

Mains connection and any extension cords and plugs used must comply with the information on the machine license plate.

The mains connection must have a 16A surge-proof fuse.

Only use extension cords marked H07RN-F, with wires 1,5mm^2 or more.

The total length of cord may not exceed 18 Meter

Power cords and plugs must be free from defects.

Connections and repairs to the electrical equipment may only be carried out by qualified electricians.

The machine is equipped with 1.8m power cord and plug.

Before connecting to power source, be sure main switch is in off position.

7.1 Grounding instructions

This tool must be grounded. In the event of a malfunction or breakdown, grounding provides a path of least resistance for electric current to reduce the risk of electric shock. This tool is equipped with an electric cord having an equipment-grounding conductor and a grounding plug. The plug must be inserted into an appropriate outlet that is properly installed and grounded in accordance with all local codes and ordinances.

WARNING:
Improper connection of the equipment-grounding conductor can result in a risk of electric shock. Check with a qualified electrician or service person if you are in doubt as to whether the outlet is properly grounded. Do not modify the plug provided with the tool.

The green/yellow conductor is the equipment-grounding conductor. If repair or replacement of the electric cord or plug is necessary, do not connect the equipment-grounding conductor to a live terminal.

Use only 3-wire extension cords with grounding plugs.

Repair or replace damaged or worn cord immediately.

7.2 Extension cords

The use of extension cords is discouraged; try to position machines near the power source. If an extension cord is necessary, make sure it is in good condition.

An undersized cord will cause a drop in line voltage resulting in loss of power and overheating.

Only use extension cords marked H07RN-F, with wires 1,5mm2 or more.

The total length of cord may not exceed 18 Meter

Extension cords and plugs must be free from defects.

8.0 Setup and Adjustments

8.1 MT3 Arbor replacement

Remove the draw bar cover (X, Figure 8-1).

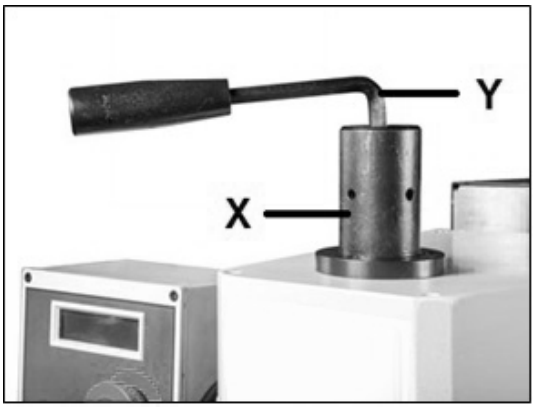

Figure 8-1: MT3 Arbor replacement

Stop spindle rotation with the supplied spanner.

Loosen the draw bar with a hex socket wrench (Y).

Loosen the drawbar by 2 to max 3 full turns.

Tap the drawbar head with a rubber mallet to dislodge the MT3 tool taper.

8.2 Engaging the fine feed hand wheel

To activate the fine feed hand wheel (C, Figure 8-2) tighten the engagement knob (F).

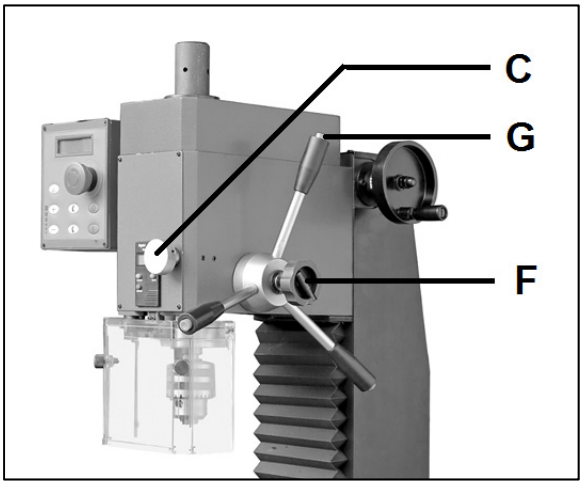

Figure 8-2: Engage fine feed hand wheel

9.0 Operating Controls

Refer to Figure 9-1:

N ..... Spindle speed display

O .....Emergency stop switch

P ..... Start button

Q .....Stop button

R ..... Forward-rotating button

S ..... Reverse-rotating button

T .....Speed-up button

U ..... Speed reduction button

V .....Tapping function button

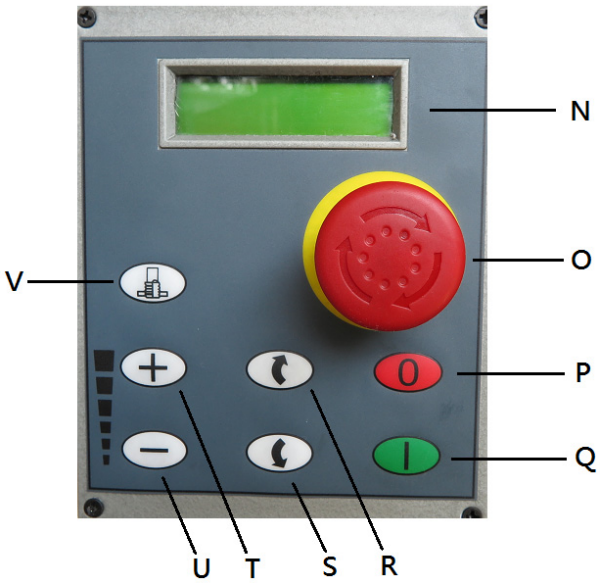

Figure 9-1: Operating Controls

Refer to Figure 9-2:

AA ..... Change mm to Inch

BB .....ON/OFF

CC ..... set display to “0”

DD .....battery compartment

(slide to right to open....battery type SR 44 or LR 44).

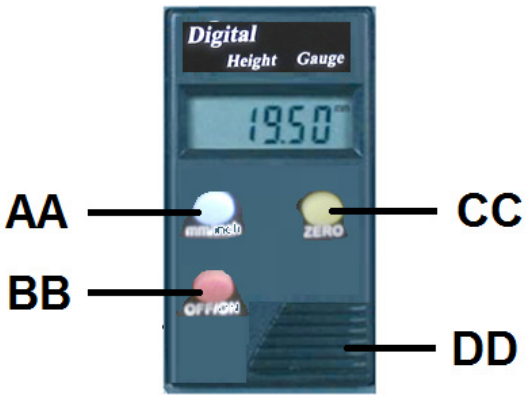

Figure 9-2: Drill Depth Display

10.0 Machining Operation

CAUTION:

Never place your fingers in a position where they could contact any rotating tool, chuck or cutting chips.

Remove cutting chips with the aid of an appropriate chip hook when the machine is at a standstill only.

Never stop the rotating chuck or tool with your hands.

Always close the chuck guard before you start the machine.

Secure work piece to the table with clamps or a vice to prevent rotating with the drill bit.

When using a vice, always fasten it to the table.

Check the save clamping of the work piece, chuck and tools before starting the machine.

Never do any works “freehand” (hand-holding the work piece rather than supporting it on the table).

Support long work pieces with helping roller stands.

Always adjust the depth stop to prevent drilling into the table or into the work holding device.

Feed a drill bit into the material with only enough force to allow the drill bit to work.
Feeding too slowly may cause burning of the work piece or tool. Feeding too quickly may cause the motor to stop and/or the drill bit to break.

Do not use wire wheels or grinding wheels on this machine.

Never cut magnesium - high danger to fire!

Measurements and adjustments may be carried out when the machine is at a standstill only.

In case of danger push the emergency stop button.

10.1 Starting spindle rotation

Before starting the machine check the proper workpiece clamping and cutting tool setup.

Close the chuck guard before you start the machine.

You can start the machine with the green ON-button (Q). The red OFF-button (P) stops the machine.

The speed can be adjusted with the +/- buttons (T/U)

The RPM will be shown on the display (N).

Use the arrow buttons to reverse the spindle direction (S). Note: Only half maximum speed in reverse direction.

The emergency stop button (O) stops all machine functions.

Turn emergency stop button clockwise to reset.

Unplug the machine if not in use.

10.2 Recommended spindle speeds

CAUTION:

Generally speaking, the smaller the tool diameter, the greater the RPM required. Soft materials require higher speeds; hard metals slower speeds.

Metal is usually machined at slower speeds and cutting oil is applied.

These are recommended speeds for a 10mm high speed steel (HSS) tool (e.g. drill bit).

Plastic ..... 2000 /min

Aluminium ..... 2000 /min

Brass ..... 1000 /min

Cast iron ..... 1000 /min

Mild steel ..... 800 /min

High carbon steel ..... 600 /min

Stainless steel ..... 300 /min

For carbide tools (HM), 5 times higher speeds can be chosen.

For example:

Milling mild steel with an end mill of 20mm allows a speed of:

With HSS tool ..... 400 /min

With carbide tool ..... 2000 /min

10.3 Tapping function

Push the tapping button (V, Fig 9-1), the tapping mode control light will be on

Choose a low speed for tapping.
Tapping speed is limited to 500 rpm.

To reverse spindle directions push the tapping control buttons on the down feed handles (G, Fig 8-2).

11.0 User-Maintenance

WARNING:
Before any intervention on the machine, disconnect it from electrical supply, pull the mains plug. Failure to comply may cause serious injury.

An important security factor is the cleaning of the machine, of Table and slides, of the floor and the surrounding places.

Loose objects could come into contact with the moving tool or workpiece, creating hazards.

Check that bolts are tight and electrical cords are in good condition. If an electrical cord is worn, cut, or damaged in any way, have it replaced immediately.

Repair and maintenance work on the electrical system may only be carried out by a qualified electrician.

11.1 Slide adjustments

All slides (X/Y/Z) are fitted with tapered gibs.

If adjustment is needed, loosen the adjust screws (33, Fig 6)

Adjust by approximately a quarter turn.

Tighten the adjust screws (33) again.

Try and repeat until slides move freely without play.

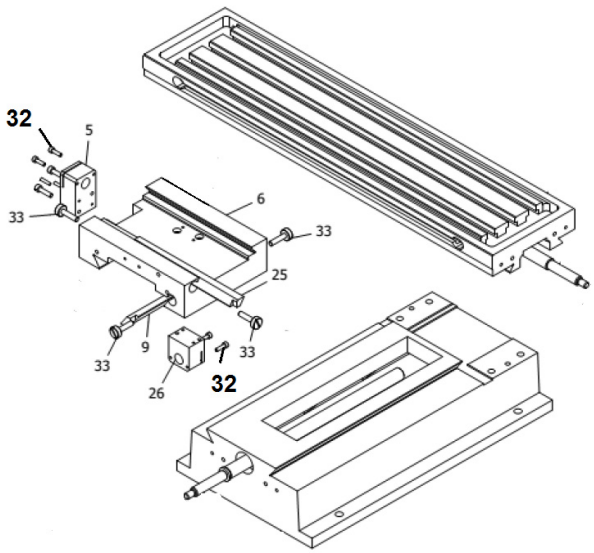

Figure 11-2: Slide and lead screw Adjustments

11.2 Lead screw nut adjustments

The X/Y lead screws are fitted with adjustable (slotted) lead screw nuts.

Tighten the screws (32, Figure 11-2) to remove the play.

11.3 Lubrication

The spindle bearings are pre-lubricated and sealed, and require no further lubrication.

Weekly apply oil:
DIN 51502 CG ISO VG 68
(e.g. BP Maccurat 68, Castrol Magna BD 68, Mobil Vectra 2)

X/Y -axis lead screw ..... apply oil on entire length.

X/Y/Z -axis hand wheels ..... lubricate ball oilers.

X/Y/Z -axis ways .....lubricate ways on entire length.

Spindle quill ..... apply oil on entire length.

Refer to the Pricelist for various accessories.

12.0 **Troubleshooting**

Symptom	Possible Cause	Correction *
Motor will not start.	Machine unplugged from wall.	Check all plug connections.
	Fuse blown, or circuit breaker tripped.	Replace fuse, or reset circuit breaker.
	Cord damaged.	Replace cord.
	Chuck guard not closed.	Close chuck guard.
Spindle does not come up to speed.	Extension cord too light or too long.	Replace with adequate size and length cord.
	Low current.	Contact a qualified electrician.
Machine vibrates excessively.	Base on uneven surface.	Locate machine on even floor.
	Machine not bolted to the floor	Bolt machine to the floor
	Unbalanced cutting tool	Reduce speed
	Workpiece deflection	Improve workpiece clamping
	Tool deflection	Reduce tool length
	Slide backlash	Adjust slides
	Slides running dry	Lubricate with oil
	Dull tool tip	Re-sharpen or change tool
	Chip load too high	Reduce depth of cut or feed
Noisy operation	Spindle quill dry	Lubricate with oil
	Lead screw nuts have play	Adjust X and Y axis nuts
Tool tip burns	Cutting speed too high	Reduce spindle speed
	Dull tool tip.	Re-sharpen or change tool
	Dry cutting.	Lubricate with oil.
	Feeding too slowly.	Increase feed rate.
Drill leads off	Cutting lips or angle not equal	Re-sharpen drill bit.
	Drilled hole off centre	Drill a pilot hole first
	Bent drill bit.	Use a proper drill bit

* **WARNING:** Some corrections may require a qualified electrician.

Table 1

13.0 **Environmental Protection**

Protect the environment.

Dispose all packaging material in an environmental friendly manner.

Dispose cutting chips and coolant in an environmentally friendly manner.

Your appliance contains valuable materials which can be recovered or recycled. Please leave it at a specialized institution.

14.0 **Replacement Parts**

PBM-1839BDV Assembly Breakdown -1

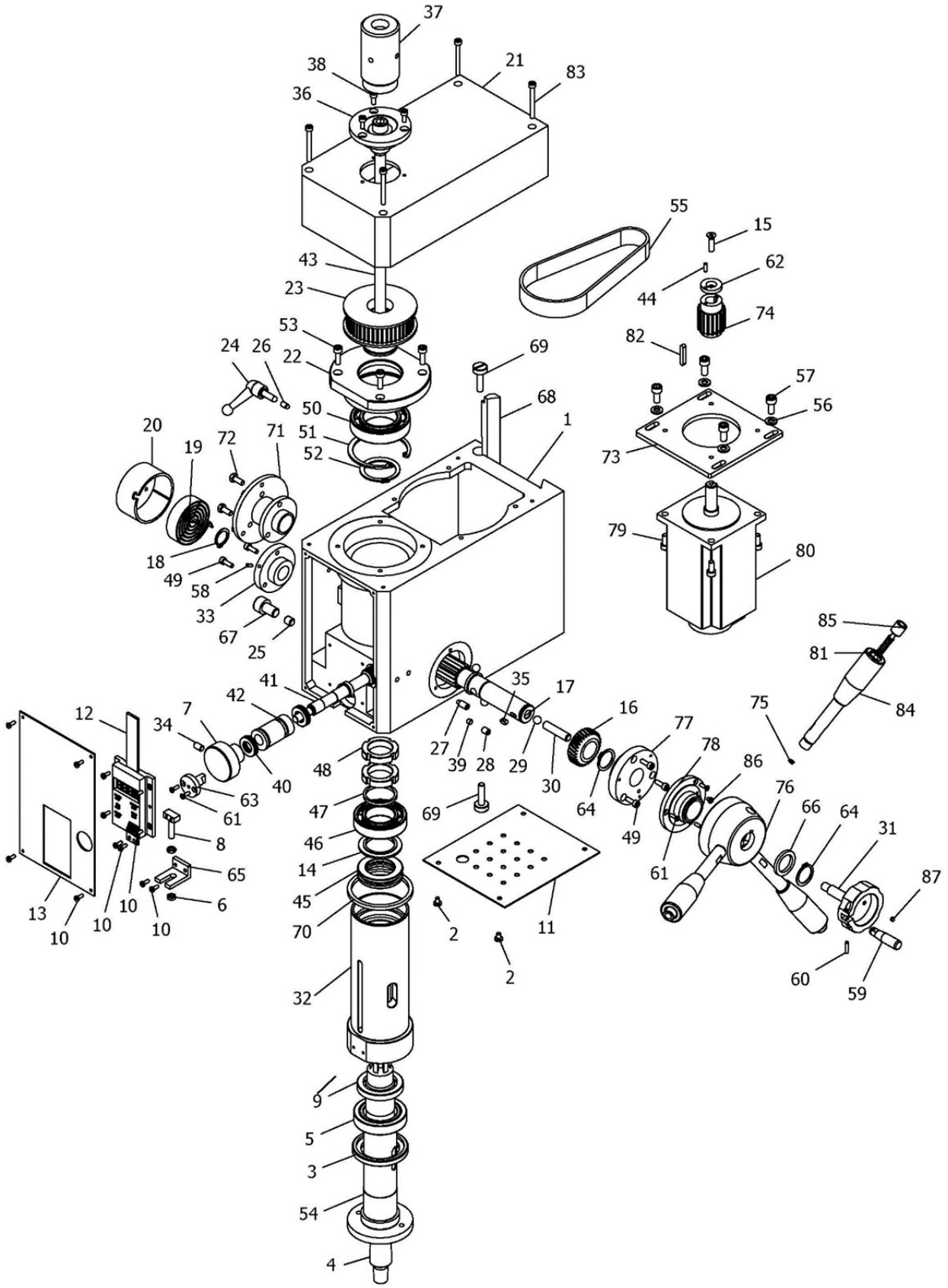

PBM-1839BDV Parts List for Breakdown -1 (1/2)

Index No.	Part No.	Description	Size	Qty.
1	PBM1839BDV-1-01	SPINDLE BOX		1
2	GB81885-4-6	PHILLIPS HD SCREW	M4 x 6 mm	2
3	JMDX2S-1-03	SPINDLE BELOW OIL SEAL RING I		1
4	JMDX2S-1-04	B16 TAPER SHANK		1
5	TRB-32907	TAPERED ROLLER BEARING	32907	1
6	GB617286-5	HEX NUT (THIN)	M5	2
7	JMDX2S-1-07	FINE FEEDING HANDWHEEL		1
8	JMDX2S-1-08	DISPLAY FIXED SQUARE SCREW		1
9	JMDX2S-1-09	SPINDLE SLEEVE BELOW OIL SEAL RING II		1
10	GB81885-3-8	PHILLIPS HD SCREW	M3 x 8 mm	12
11	JMDX2S-1-11A	BASE PLATE		1
12	JMDX2S-1-12	DIGITAL DISPLAY MODULE		1
13	PBM1839BDV-1-13	PANEL		1
14	JMDX2S-1-14	UP WASHER II		1
15	GB81985-5-20	CROSS RECESSED FLAT HD SCREW	M5 x 20	1
16	JMDX2S-1-16	BEVEL GEAR		1
17	JMDX2S-1-17	GEAR SHAFT		1
18	GB8941-16	CIRCLIP FOR SHAFT	16	1
19	JMDX2S-1-19	CLOCK SPRING		1
20	JMDX2S-1-20	CLOCK SPRING COVER		1
21	PBM1839BDV-1-21	SPINDLE BOX COVER		1
22	JMDX2S-1-22	BEAR SEAT		1
23	JMDX2S-1-23	SPINDLE TIMING BELT		1
24	JMDX2S-1-24	SMALL HANDLE ASSEMBLY		1
25	JMDX2S-1-25	SPINDLE SLEEVE LOCKING SHAFT		1
26	JMDX2S-1-26	TIGHTEN THE TOP ROD		1
27	GB7985-6-14	SET SCREW (CYLINDER END)	M6 x 14 mm	1
28	GB7785-6-8	SET SCREW (FLAT END)	M6 x 8 mm	1
29	GB30889-8	STELL BALL	8 mm	3
30	JMDX2S-1-30	LOCKING SMALL SHAFT		1
31	JMDX2S-1-31	WORM LOCKING HANDLE		1
32	JMDX2S-1-32	SPINDLE SLEEVE		1
33	JMDX2S-1-33	SHAFT GEAR LEFT SUPPORT FLANGE		1
34	GB7785-6-10	SET SCREW (FLAT END)	M6 x 10 mm	1
35	GB109679-4-8	FLAT KEY	4 x 8 mm	1
36	JMDX2S-1-36	SPINDLE UP DUST GUARD I		1
37	JMDX2S-1-37	SPINDLE UP DUST GUARD II		1
38	GB7085-4-10	SOCKET HD SCREW	M4 x 10 mm	3
39	JMDX2S-1-39	ECCENTRIC SLEEVE LOCKING BLOCK		1
40	TBB-57001	THRUST BALL BEARING	12 x 22 x 5	2
41	JMDX2S-1-41	WORM SHAFT		1
42	JMDX2S-1-42	WORM ECCENTRIC SLEEVE		1
43	JMDX2S-1-43	LOCKING BOLT ASSEMBLY		1
44	GB11986A-3-10	ROUND PIN	3 x 10	1
45	TBB-51106	THRUST BALL BEARING		1
46	BB-6006ZZ	BALL BEARING	6006ZZ	1
47	JMDX2S-1-47	UP WASHER		1
48	JMDX2S-1-48	SLOTTED ROUND NUT		2
49	GB7085-4-12	SOCKET HD SCREW	M4 x 12 mm	6

PBM-1839BDV Parts List for Breakdown -1 (2/2)

Index No.	Part No.	Description	Size	Qty.
50	BB-6007ZZ	BALL BEARING	6007ZZ	1
51	GB8931-62	CIRCLIP FOR HOLE	62	1
52	GB8941-35	CIRCLIP FOR SHAFT	35	1
53	GB7085-5-16	SOCKET HD SCREW	M5 x 16 mm	4
54	JMDX2S-1-54	SPINDLE		1
55	JMDX2S-1-55	TIMING BELT	HTD-385 Z77	1
56	GB97185-6	WASHER	6	4
57	GB7085-6-14	SOCKET HD SCREW	M6 x 14 mm	4
58	GB87986-3-8	ROLL PIN	3 x 8 mm	2
59	JMDX2S-1-59	ASSIST SMALL HANDLE		1
60	GB11986A-3-14	ROUND PIN	3 x 14 mm	1
61	GB81985-3-10	CROSS RECESSED FLAT HD SCREW	M3 x 10 mm	5
62	JMDX2S-1-62	WASHER		1
63	JMDX2S-1-63	SPINDLE SLEEVE POSITION SHAFT		1
64	GB8941-20	CIRCLIP FOR SHAFT	20	2
65	JMDX2S-1-65	DISPLAY FIXED BRACKET		1
66	JMDX2S-1-66	ROUND GEAR SHAFT ADJUST WASHER		1
67	GB7085-10-16	SOCKET HD SCREW	M10 x 16 mm	1
68	JMDX2S-1-68	BEVEL WEDGE		1
69	JMDX2S-1-69	WEDGE SCREW		2
70	JMDX2S-1-70	SLEEVE LIMTED WASHER		1
71	JMDX2S-1-71	ATACHMENT BRACKET		1
72	GB578186-5-12	HEX HD SCREW	M5 x 12 mm	3
73	JMDX2S-1-73	MOTOR SUPPORT PLATE	1/4" x 1/4"	1
74	JMDX2S-1-74	MOTOR TIMING PULLEY	1/4" x 1/4"	1
75	GB89686-3	E RING	3 mm	3
76	JMDX2S-1-76	HANDLE SEAT		1
77	JMDX2S-1-77	SHAFT GEAR RIGHT SUPPORT FLANGE		1
78	JMDX2S-1-78	CONDUCTING RING ASSEMBLY		1
79	GB7085-5-12	SOCKET HD SCREW	M5 x 12 mm	4
80	JMDX2S-1-80	MOTOR (DC-BRUSHLESS)	750W	1
81	GB208980-08-6-25	SPRING	0.8 x 6 x 25 mm	3
82	GB109679-4-25	FLAT KEY	4 x 25 mm	1
83	GB7085-4-40	SOCKET HD SCREW	M4 x 40 mm	4
84	JMDX2S-1-84	CONTROL POLE ASSEMBLY		3
85	JMDX2S-1-85	F/R CONTROL POLE ASSEMBLY		3
86	GB81885-3-4	PHILLIPS HD SCREW	M3 x 4 mm	1
87	JMDX2S-1-87	MAGNET		1

PBM-1839BDV Assembly Breakdown -2

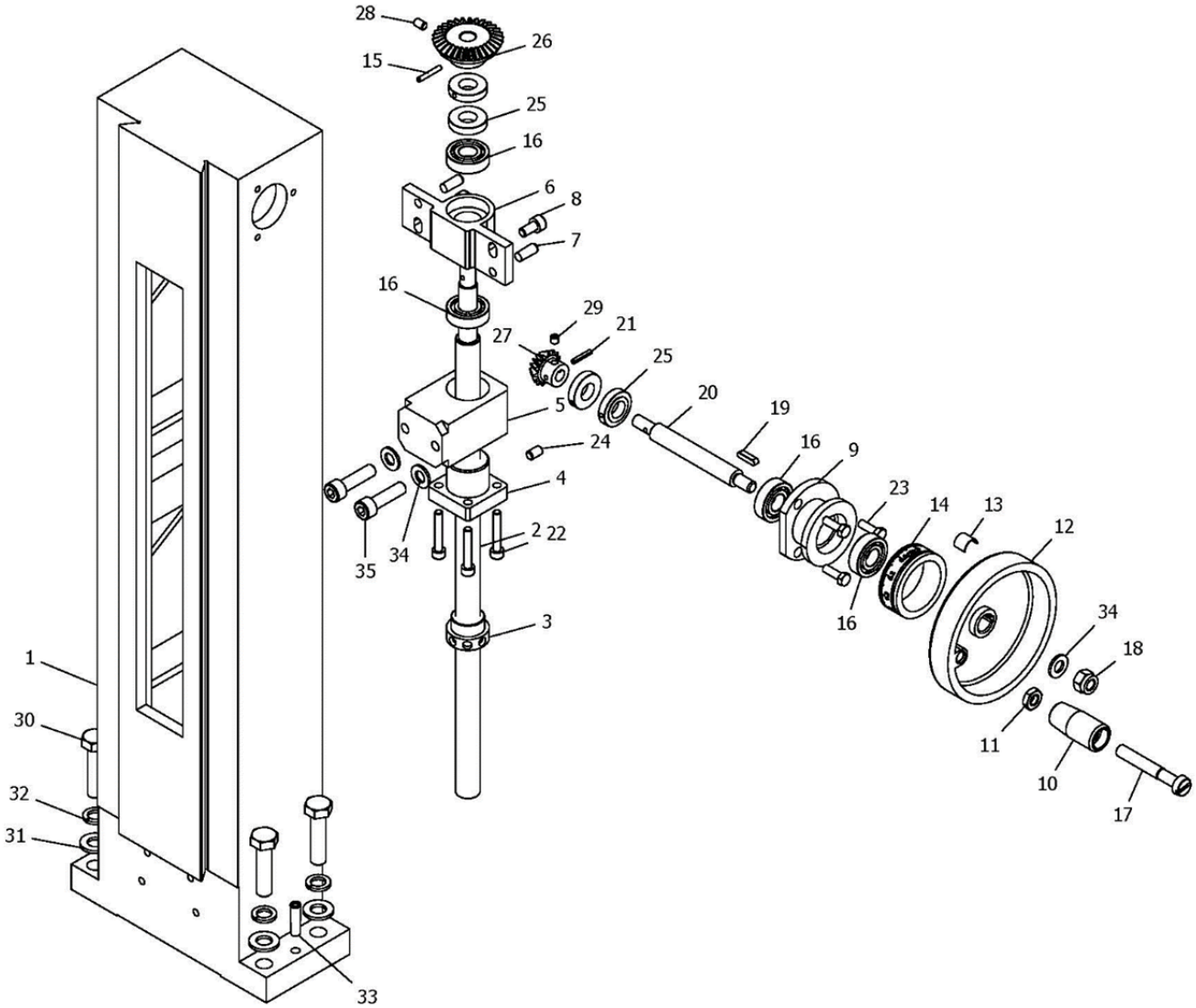

PBM-1839BDV Parts List for Breakdown -2

Index No.	Part No.	Description	Size	Qty.
1	JMDX2S-2-01	COLUMN		1
2	JMDX2S-2-02	METRIC RISE AND DOWN LEADSCREW		1
3	JMDX2S-2-03	METRIC RISE AND DOWN LOCKING NUT		1
4	JMDX2S-2-04	METRIC RISE AND DOWN LEADSCREW NUT		1
5	JMDX2S-2-05	COLUMN NUT SUPPORT		1
6	JMDX2S-2-06	LEADSCREW SUPPORT		1
7	GB11886-6-16	TAPER PIN WITH INTERNAL THREAD	6 x 16 mm	2
8	GB7085-6-12	SOCKET HD SCREW	M6 x 12 mm	2
9	JMDX2S-2-09	RISE AND DOWN SUPPORT SEAT		1
10	JMDX2S-2-10	HANDLE		1
11	GB617286-8	HEX NUT (THIN)	M8	1
12	JMDX2S-2-12	HANDLE WHEEL		1
13	JMDX2S-2-13	SPRING PIECE		1
14	JMDX2S-2-14	METRIC RISE AND DOWN SCALE DIAL		1
15	GB87986-3-20	ROLL PIN	3 x 20 mm	1
16	BB-6001	BALL BEARING	6001	4
17	GB6585-8-55	SLOTTED LARGE CHEESE HD SCREW	M8 x 55 mm	1
18	GB88986-8	HEX LOCKING NUT	M8	1
19	GB109679-4-16	FLAT KEY	4 x 16 mm	1
20	JMDX2S-2-20	RISE AND DOWN SHAFT		1
21	GB87986-3-16	ROLL PIN	3 x 16 mm	1
22	GB7085-5-30	SOCKET HD SCREW	M5 x 30 mm	4
23	GB578186-5-16	HEX HD SCREW	M5 x 16 mm	3
24	GB7785-6-10	SET SCREW (FLAT END)	M6 x 10 mm	1
25	JMDX2S-2-25	LOCKING NUT		4
26	JMDX2S-2-26	BIG BEVEL GEAR WHEEL		1
27	JMDX2S-2-27	SMALL BEVEL GEAR WHEEL		1
28	GB7885-5-8	SET SCREW (CONE END)	M5 x 8 mm	1
29	GB7885-5-5	SET SCREW (CONE END)	M5 x 5 mm	1
30	GB578086-10-40	HEX HD SCREW	M10 x 40 mm	4
31	GB97185-10	WASHER	10	4
32	GB85987-10	SPRING WASHER (LIGHT)	10	4
33	GB11886-6-24	TAPER PIN WITH INTERNAL THREAD	6 x 24 mm	2
34	GB97185-8	WASHER	8	1
35	GB7085-8-30	SOCKET HD SCREW	M8 x 30 mm	2

PBM-1839BDV Assembly Breakdown -3

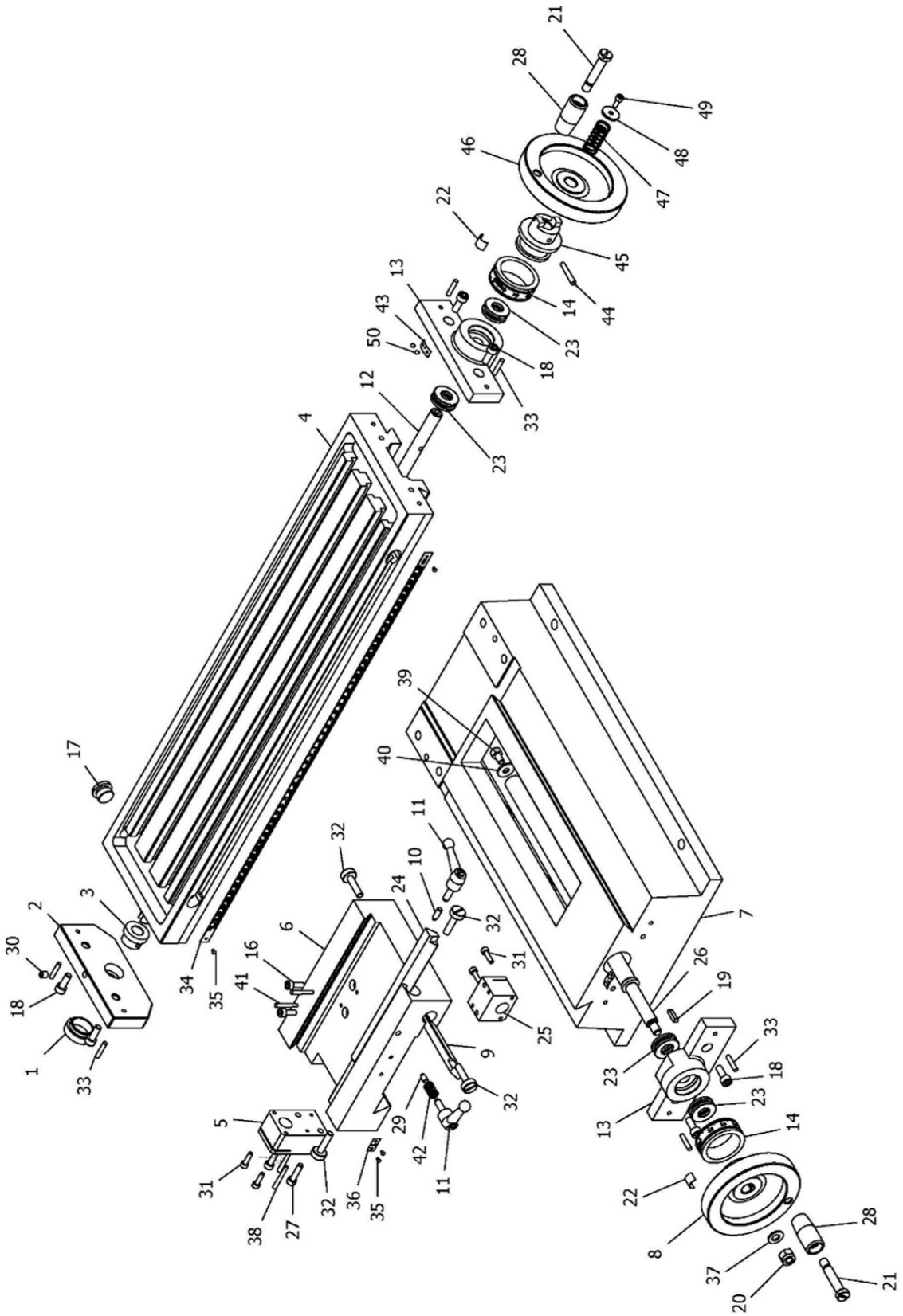

PBM-1839BDV Parts List for Breakdown -3

Index No.	Part No.	Description	Size	Qty.
1	JMDX2S-3-01	COVER		1
2	JMDX2S-3-02	BRACKET		1
3	JMDX2S-3-03	SLEEVE		1
4	JMDX2S-3-04	WORK TABLE		1
5	JMDX2S-3-05	METRIC LONGITUDINAL LEADSCREW NUT		1
6	JMDX2S-3-06	SADDLE		1
7	PBM1839BDV-3-07	BASE		1
8	JMDX2S-3-08A	HANDWHEEL		2
9	JMDX2S-3-09	CROSS BEVEL WEDGE		1
10	JMDX2S-3-10	LONGITUDINAL WEDGE LOCKING CROWN BAR		1
11	JMDX2S-3-11	SMALL HANDLE ASSEMBLY		2
12	JMDX2S-3-12A	METRIC LONGITUDINAL LEADSCREW		1
13	JMDX2S-3-13	BEARING SEAT		2
14	JMDX2S-3-14	METRIC LONGITUDINAL/CROSS SCALE DIAL		2
16	GB7085-5-14	SOCKET HD SCREW	M5 x 14 mm	2
17	JMDX2S-3-17	PLUG		1
18	GB7085-6-16	SOCKET HD SCREW	M6 x 16 mm	6
19	GB109679-4-16	FLAT KEY	4 x 16 mm	1
20	GB88986-8	HEX LOCKING NUT	M8	1
21	GB6585-8-55	SLOTTED LARGE CHEESE HD SCREW	M8 x 55 mm	2
22	JMDX2S-3-22	SPING PIECE		2
23	TBB-51101	THRUST BALL BEARING	51101	4
24	JMDX2S-3-24	LONGITUDINAL BEVEL WEDGE		1
25	JMDX2S-3-25	METRIC CROSS LEADSCREW NUT		1
26	JMDX2S-3-26	METRIC CROSS LEADSCREW		1
27	GB7085-5-20	SOCKET HD SCREW	M5 x 20 mm	2
28	JMDX2S-3-28A	HANDLE		2
29	JMDX2S-3-29	TIGHTEN THE TOP ROD		1
30	JBT7940495-6	OIL CUP	6	1
31	GB7085-4-14	SOCKET HD SCREW	M4 x 14 mm	4
32	JMDX2S-3-32	WEDGE SCREW		4
33	GB11986A-4-20	ROUND PIN	4 x 20 mm	6
34	JMDX2S-3-34	SCALE		1
35	GB82786-2-3	RIVET	2 x 3 mm	4
36	JMDX2S-3-36	ZERO LABEL		1
37	GB97185-8	WASHER	8	1
38	GB11786A-3-30	TAPER PIN	3 x 30 mm	2
39	GB7085-6-10	SOCKET HD SCREW	M6 x 10 mm	1
40	GB9685-6	BIG WASHER	6	1
41	GB11786B-3-26	TAPER PIN	3 x 26 mm	2
42	JMDX2S-3-42	SPRING		1
43	JMDX2S-3-43	INDICATOR		2
44	GB11786A-4-28	TAPER PIN	4 x 28 mm	1
45	JMDX2S-3-45	CLUTCH		1
46	JMDX2S-3-46	HANDWHEEL		1
47	JMDX2S-3-47	SPRING		1
48	JMDX2S-3-48	WASHER		1
49	GB7085-4-10	SOCKET HD SCREW	M4 x 10 mm	1
50	GB82786-2-4	RIVET	2 x 4 mm	4

PBM-1839BDV Assembly Breakdown -4

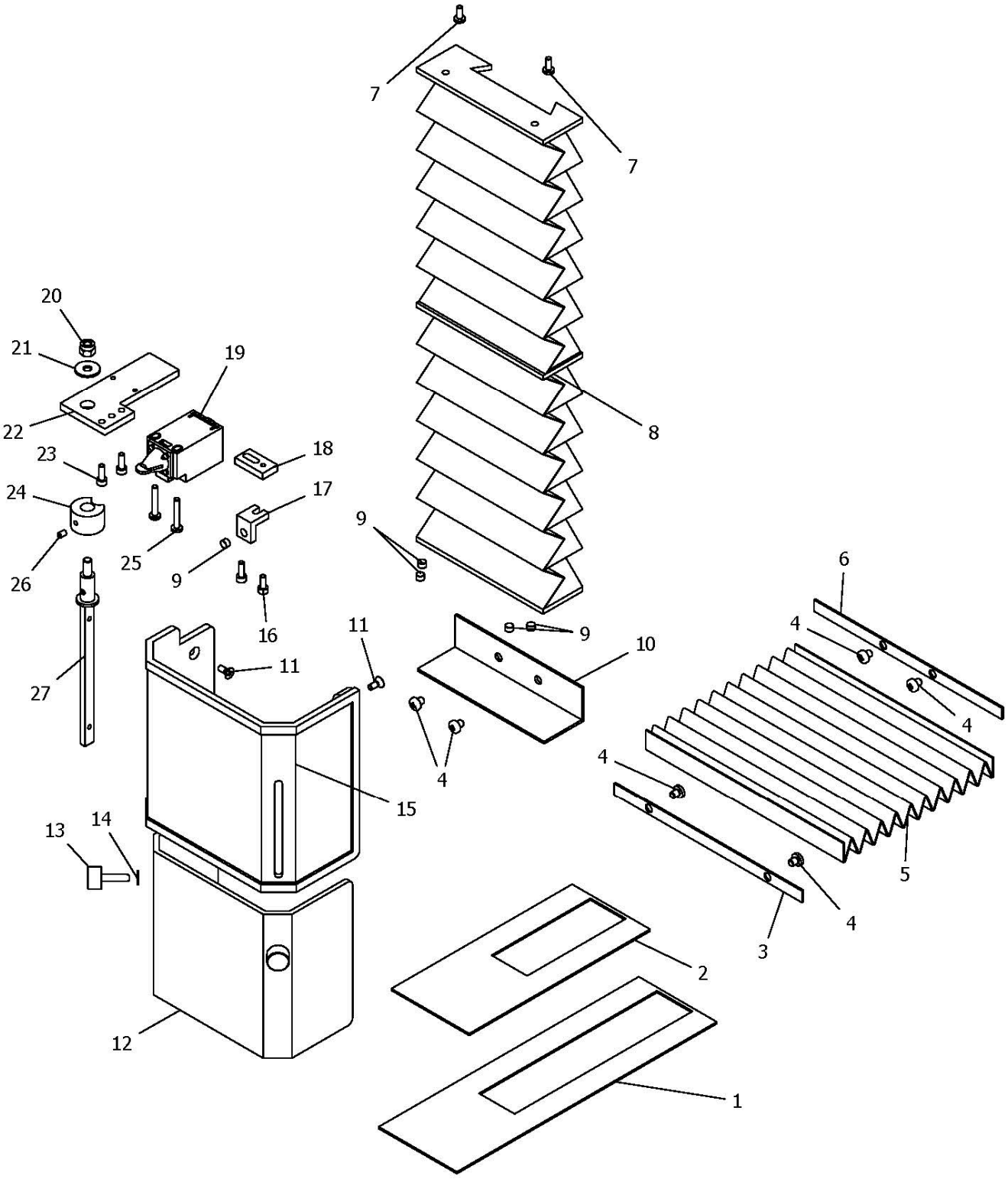

PBM-1839BDV Parts List for Breakdown -4

Index No.	Part No.	Description	Size	Qty.
1	JMDX2S-4-01	SPLASH GUARD I		1
2	JMDX2S-4-02	SPLASH GUARD II		1
3	JMDX2S-4-03	FILLER STRIP		1
4	GB81885-4-6	PHILLIPS HD SCREW	M4 x 6 mm	6
5	JMDX2S-4-05	DUST GUARD		1
6	JMDX2S-4-06	DEAD PLATE		1
7	GB81885-4-10	PHILLIPS HD SCREW	M4 x 10 mm	2
8	JMDX2S-4-08	RISE AND DOWN GUIDEWAY COVER		1
9	JMDX2S-4-09	MAGNET STEEL		5
10	JMDX2S-4-10	SHIELD BAFFLE		1
11	GB81985-4-10	CROSS RECESSED FLAT HD SCREW	M4 x 10 mm	3
12	JMDX2S-4-12	THE INNER SHIELD		1
13	GB83588-5-20	KNURLED SCREW	M5 x 20 mm	2
14	GB97185-5	WASHER	5	2
15	JMDX2S-4-15	OUTER PROTECTIVE COVER		1
16	GB7085-4-10	SOCKET HD SCREW	M4 x 10 mm	1
17	JMDX2S-4-17	BLOCK		1
18	JMDX2S-4-18	CONNECTING PLATE		1
19	JMDX2S-4-19	SAFETY LIMIT SWITCH		1
20	GB88986-6	HEX LOCKING NUT	M6	1
21	GB9685-6	BIG WASHER	6	1
22	JMDX2S-4-22	SUPPORT PLATE		1
23	GB7085-4-12	SOCKET HD SCREW	M4 x 12	3
24	JMDX2S-4-24	SPACER BUSH		1
25	GB81885-4-25	PHILLIPS HD SCREW	M4 x 25 mm	2
26	GB7885-4-6	SET SCREW (CONE END)	M4 x 6 mm	1
27	JMDX2S-4-27	ROTATARY SHAFT		1

PBM-1839BDV Assembly Breakdown -5

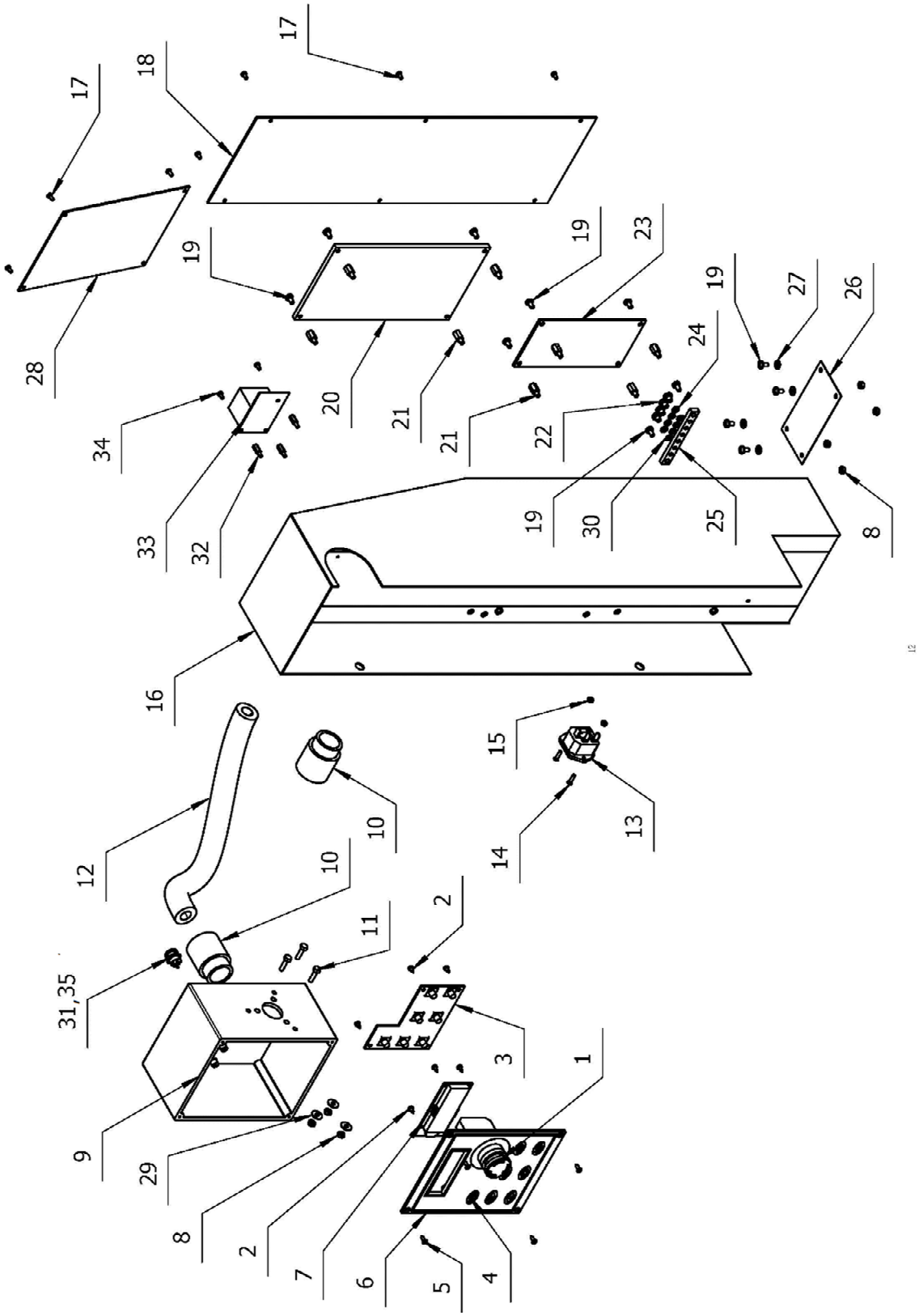

PBM-1839BDV Parts List for Breakdown -5

Index No.	Part No.	Description	Size	Qty.
1	JMDX2S-5-01	EMERGENCY STOP		1
2	GB84585-29-65	BUTTON HD TAP SCREW	ST2.9 x 6.5 mm	8
3	JMDX2S-5-03	TOUCH PANEL		1
4	JMDX2S-5-04	LABEL		1
5	GB84685-29-95	FLAT HD TAP SCREW	ST2.9 x 9.5 mm	4
6	PBM1839BDV-5-06	ELECTRIC BOX COVER		1
7	JMDX2S-5-07	ROTATARY SPEED DISPLAY		1
8	GB617086-4	HEX NUT	M4	7
9	PBM1839BDV-5-09	ELECTRIC BOX		1
10	JMDX2S-5-10	TUBE CONNECTOR		2
11	GB578186-4-16	HEX HD SCREW	M4 x 16 mm	3
12	JMDX2S-5-12	TUBE		1
13	JMDX2S-5-13	POWER SOCKET		1
14	GB81985-3-12	CROSS RECESSED FLAT HD SCREW	M3 x 12	2
15	GB617086-3	HEX NUT	M3	2
16	PBM1839BDV-5-16	BACK COVER		1
17	GB81985-3-6	CROSS RECESSED FLAT HD SCREW	M3 x 6 mm	10
18	PBM1839BDV-5-18	BACK COVER		1
19	GB81885-4-8	PHILLIPS HD SCREW	M4 x 8 mm	14
20	JMDX2S-5-20	PC BOARD		1
21	HTS-310-3-10	HEX END STUD (PLASTIC)	M3 x 10 mm	8
22	GB81885-5-6	PHILLIPS HD SCREW	M5 x 6 mm	4
23	JMDX2S-5-23	FILTER		1
24	GB9387-5	SPRING WASHER (STD)	5	4
25	JMDX2S-5-25	GROUNDING BAR		1
26	JMDX2S-5-26	BLOW DUST GAUZE		1
27	GB97185-4	WASHER	4	4
28	PBM1839BDV-5-28	UP COVER		1
29	GB97185-4	WASHER	4	4
30	GB9387-5	SPRING WASHER (STD)	5	4
31	PBM1839BDV-5-31	COVER		1
32	JMDX2SDRO-5-32	HEX ISOLATION COLUMN FOR DRO		3
33	PBM1839BDV-5-33	COVER		1
34	GB81985-3-6	CROSS RECESSED FLAT HD SCREW		3
35	JMDX2SDRO-5-31	SOCKET FOR DRO		1

PBM-1839BDV ACCESSORIES Parts List

Index No.	Part No.	Description	Size	Qty.
1	JMDX2S-ACCS-01	T NUT		2
2	JMDX2S-ACCS-02	DOUBLE END WRENCH (SET)	8-10, 14-17, 17-19	1
3	JMDX2S-ACCS-03	ALLEN WRENCH (SET)	3, 4, 5, 6, 8	1
4	JMDX2S-ACCS-04	L HEX WRENCH		1
5	JMDX2S-ACCS-05	SLANT WEDGE		1
6	JMDX2S-ACCS-06	FUSE	230V/8A	1
7	JMDX2S-ACCS-07	OIL CUP		1
8	PBM1839BDV-ACCS-08	CHUCK	B16	1

15.0 **Wiring Diagrams**

PBM-1839BDV …….1~230V, PE, 50Hz

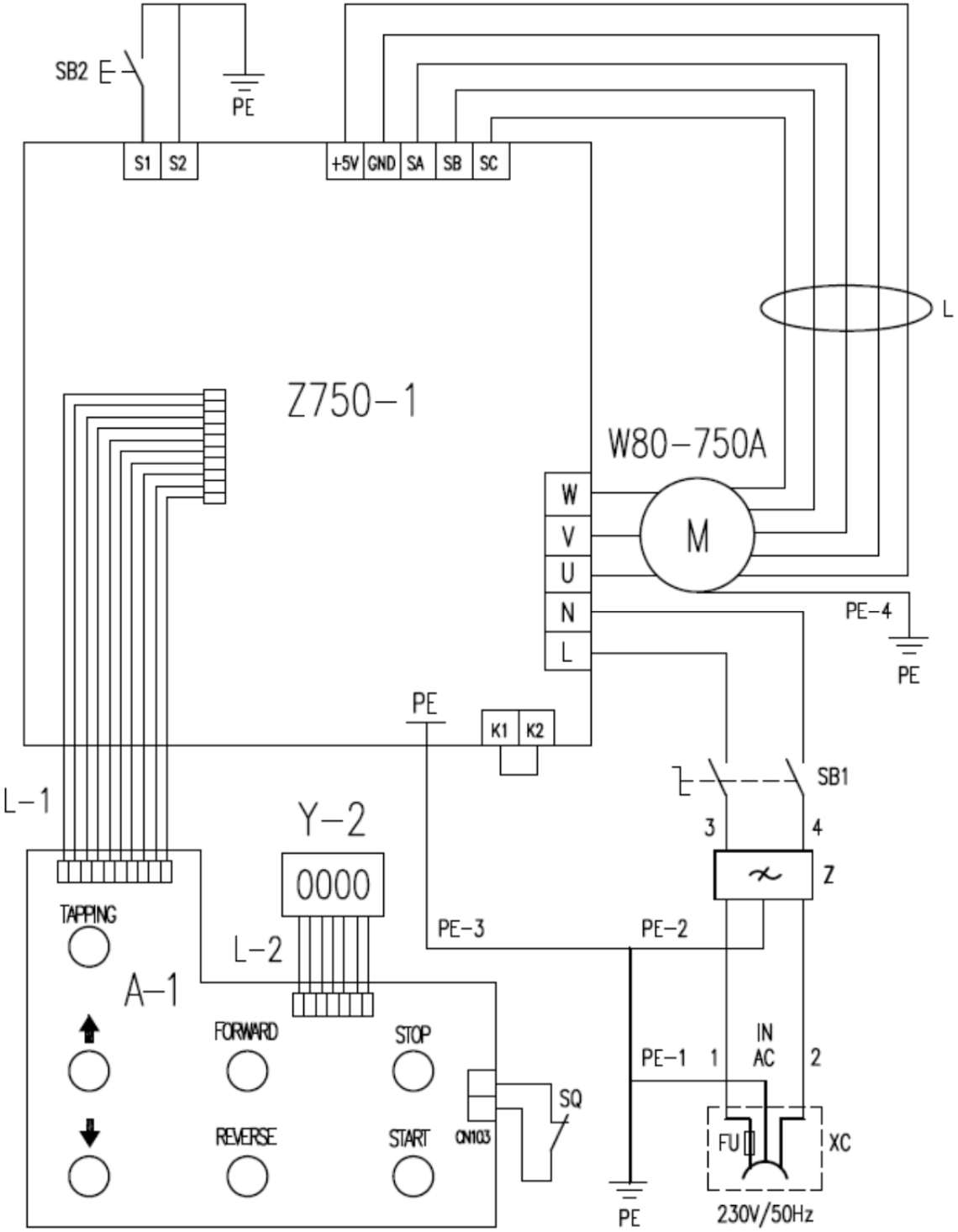

PBM-1839BDM Electrical Parts List

ITEM	DESCRIPTION	TYPE	SPECIFICATION
Z750-1	Main PC board		
W80-750A	Brushless DC motor		750W
FU	Fuse		8A
A-1	Touch panel		
Z	Filter		
SQ	Micro switch		
SB1	Emergency switch		
SB2	Button for tapping		
XC	Socket with fuse		
L-1	Ten core cable		
Y-2	LCD panel		
L-2	Flat cable		
L	Magnet ring		